UV Sterilizer And Sanitizer Cabinet With Timer (SKU16395)

SKIN+ACT

Toll Free: 1.800.418.0830	www.skinact.com www.spaandequipment.com	International: 818.834.6640

Copyright © 2025 Spa and Equipment, All Rights Reserved

NOTICE

No part of this document may be photocopied, reproduced, or translated into any other language without prior written consent of Spa and Equipment/SkinAct.

The information in this document is subject to change without notice at any time and should not be construed as a commitment by Spa and Equipment/SkinAct.

Spa and Equipment/SkinAct assumes no responsibility for any errors that may be in this document, nor does it make expressed or implied warranty with regard to this material, including, but not limited to, the implied warranties of merchantability and fitness for a particular purpose.

Spa and Equipment/SkinAct shall not be liable for incidental or consequential damages arising out of the furnishing, performance, or use of this document and the program material which it describes.

SKIN+ACT

User Manual

1. Function

The sterilization box uses ultraviolet (UV) light emitted by a sterilization lamp. The UV light and the oxygen in the air generate ozone, which effectively eliminates bacillus coli, hepatitis B, and other bacteria. This device can be used to sterilize towels and other beauty tools that are not resistant to high temperatures.

2. Technical Specifications

- Voltage: 220–240V or 120V
- Frequency: 50–60Hz
- Power: 23W (220–240V), 20W (120V)
- Rated Input Power: ≥ 15 minutes
- Volume: 26L
- Category of Electric Shock Prevention: Category 1

Note: This instruction manual applies to the above electrical specifications. Always check the electric nameplate of the product before use.

3. Operating Instructions

1. Place the articles to be sterilized on the bracket, then close the door of the box.

2. Switch on the device by pressing the power switch. The indicator light will turn on, and sterilization will begin.

3. Once sterilization is complete, turn off the power switch and remove the sterilized items for use.

4. Important Notes

Always close the door properly before switching on the machine. Otherwise, ozone leakage may occur, resulting in poor sterilization.

Do not overlap articles inside the box, as this reduces sterilization effectiveness.

Disconnect the power supply before performing any maintenance. For cleaning, use a towel dampened with a mild neutral detergent to wipe both the inside and outside of the box. Then, use a clean, dry towel to remove any residue.

If you encounter a malfunction (e.g., lamp failure or power issue), contact a qualified electrician for repair using components of the same specification.

Operate this device strictly according to the instructions. Misuse may cause accidents or poor sterilization results.

5. Warnings

This machine is not suitable for individuals with physical weakness, slow reaction times, or respiratory impairments (including children), unless supervised by a responsible adult.

Children must not operate this machine unsupervised. Always ensure adult supervision when children are nearby.

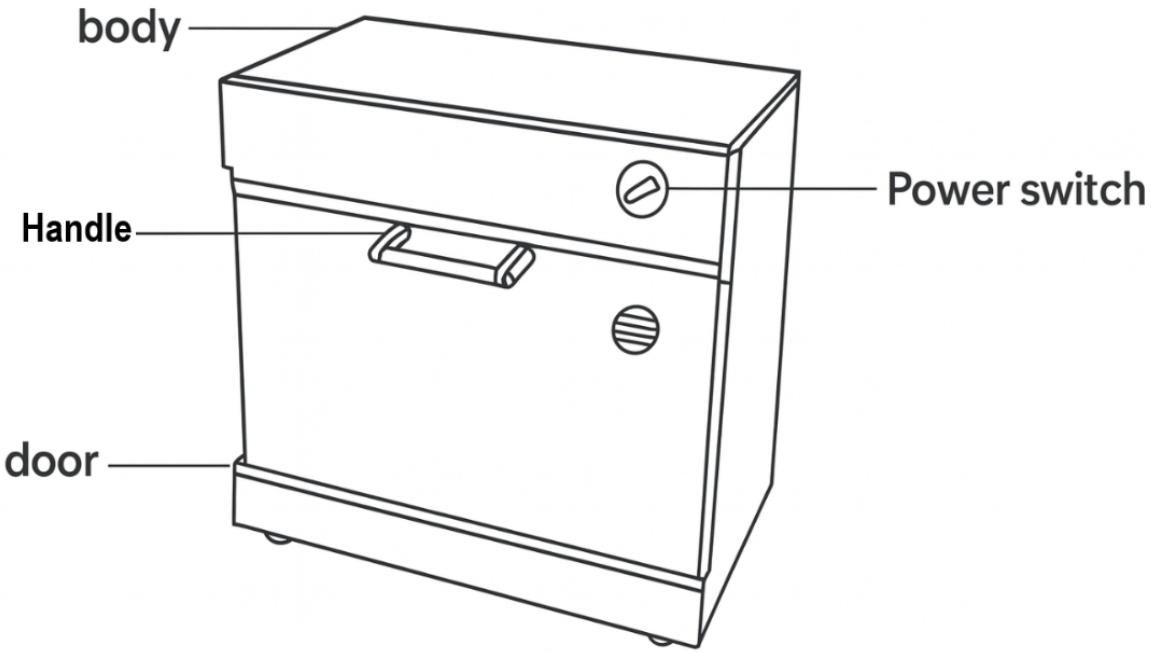
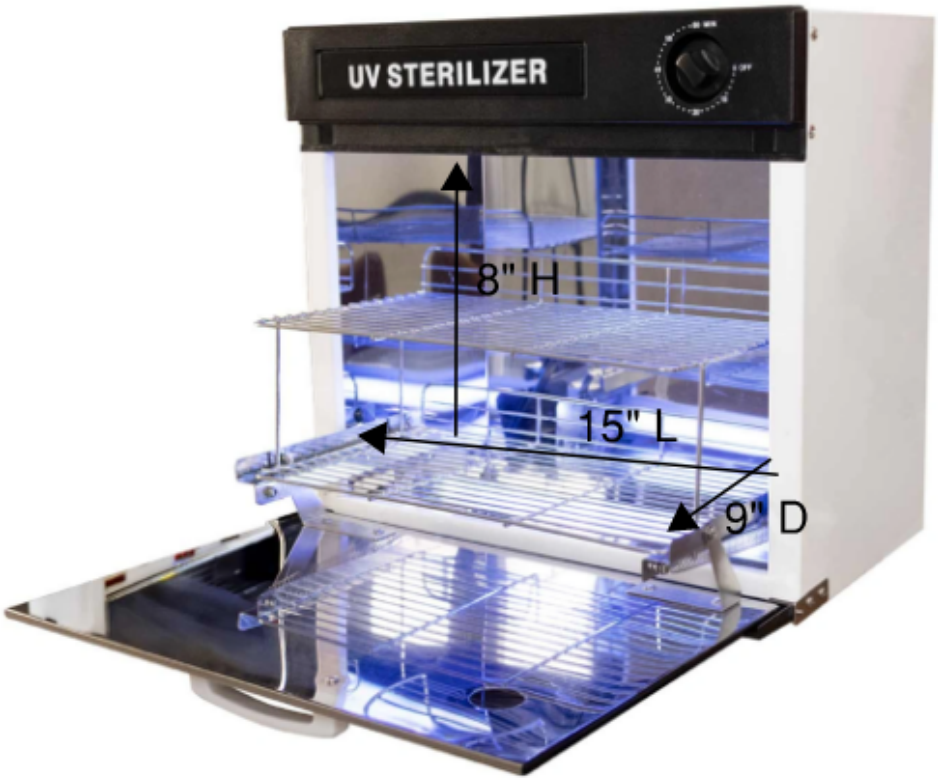
Outside dimensions: 16" H x 10" D x 16" L
Inside dimensions: 8" H x 9" D x 15" L